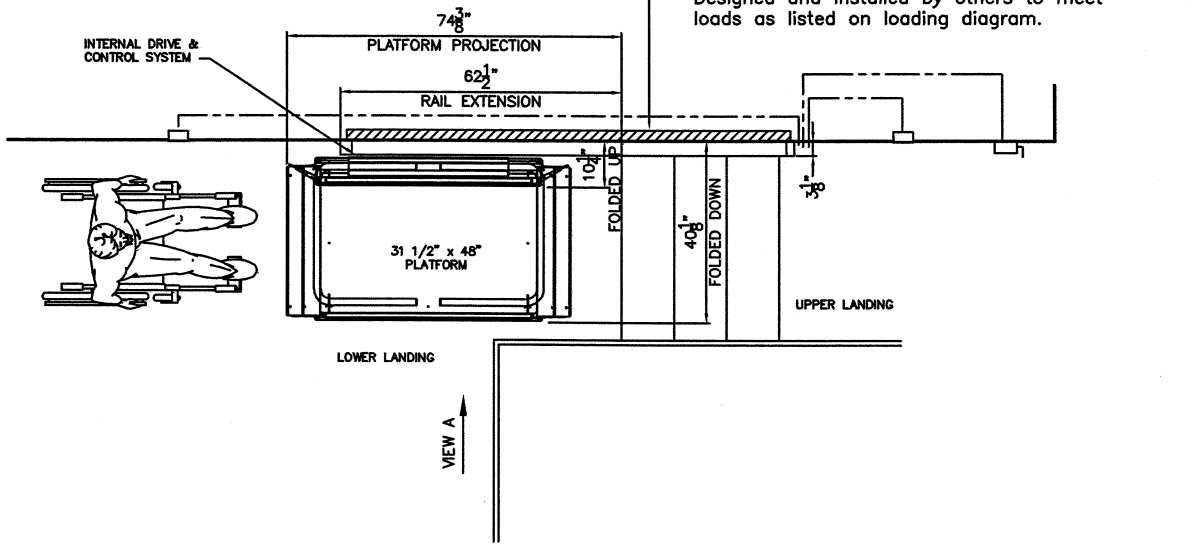

(LOADS ARE BASED ON A 31 1/2" x 48" PLATFORM)

F_1: 265.0 lbf
F_2: 495.0 lbf
d_1: 14 1/4"
d_2: 23 1/2"
X : 1 1/4"

MOMENT AT CENTER OF TOWER

M = F x d (F: FORCE; d: DISTANCE)
$M = F_1 \times (d_1+X) + F_2 \times (d_2+X)$

MAXIMUM MOMENT

M = 17022.1 lbf in.

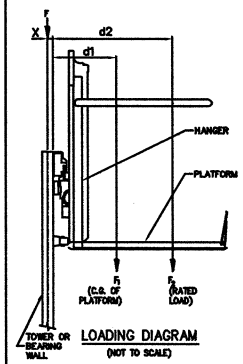

LOADING DIAGRAM
(NOT TO SCALE)

XPRESS II STAIRLIFT SPECIFICATIONS

Code References:
- CSA–B355–00: Lifts for Persons with Physical Disabilities
- ASME A17.1 "Safety Code for Elevators and Escalators", Part XX (Commercial Public Buildings) or ASME A18.1 "Safety Standard for Platforms Lifts and Stairway Chairlifts"
- BSI 8440: 1990; Powered lifting platforms for use by disabled persons.

Drive:
- Operates via worm gear reduction to a pinion moving on a floodgear rack.
- 0.75 HP
- 208–240 VAC, single phase, 50/60 Hz, on a dedicated 20 amp. circuit

Capacity:
- Maximum 495 lb operating load.

Travel Speed:
- 4 m/min [13 ft/min] traveling up; 5 m/min [16 ft/min] traveling down.

Location:
- Indoor Lift

Attachment:
- Direct Mount

Color:
- Non–slip black sandex powder coat on Platform Deck
- Champaign Anodized Finish on Upper & Lower Rails & Landing Ramps
- Fine Textured Satin Gray powder coat on Sensing Plate, Grab Bar, Call Station Boxes, Audio Visual Box, Curved Arms, Handrail

Safeties:
- Emergency stop switch near platform controls
- Under platform sensing
- Ramp sensing
- Emergency manual lowering and folding
- Pedestrian safety lights on platform
- Mechanical Stop
- Overspeed governor on upper carriage drive, containing mechanical overspeed sensor and lock, with electrical drive cut–out protection
- Handrail
- Flush Mount Audio Visual Alert

Platform:
- 18 ga. galvanized steel plate deck with non slip finish
- Grab bar
- 31 1/2" x 48" Platform Deck
- Lower Ramp – Standard 7.25"
- Upper Ramp – Standard 7.25"
- Curved Safety Arms
- Attendant Remote Control
- Auto–fold Kit
- Keyed Operation
- Inhanger Alarm Kit

Call Stations:
- Flush Mount Call Station Kit (x 2)
- Platform call buttons and platform & ramp power fold buttons c/w Operating Instructions and Passenger Restriction Labels
- Keyed Operation

208–240 VAC, SINGLE PHASE,
50/60 HZ, DEDICATED 20 AMP CIRCUIT

FUSED, LOCKABLE,
HEAVY–DUTY
DISCONNECT REQUIRED
– BY OTHERS.

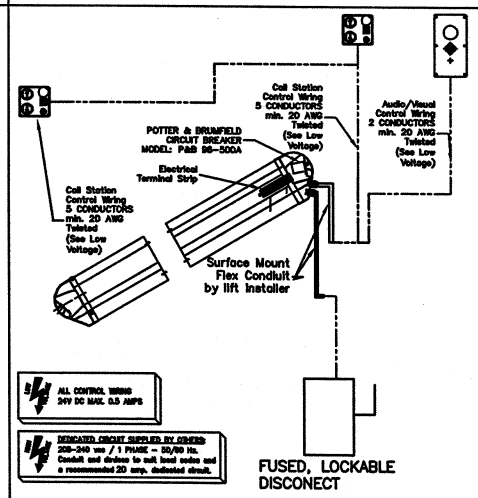

WIRING AND ELECTRICAL INFORMATION

Clear, Safe overhead as required to meet applicable building and Lift Safety Codes. (By others)

FLUSH MOUNT AUDIO VISUAL LOCATED AND INSTALLED ON SITE TO APPLICABLE CODE REQUIREMENTS

CONCEPTUAL DRAWING ONLY
NOT FOR CONSTRUCTION

This platform lift, when installed and licensed for independent operation, meets the technical requirements of ADAAG, including Section 4.2.4.1, which mandates a minimum 1220 x 760 mm (48 x 30 inch) platform size.

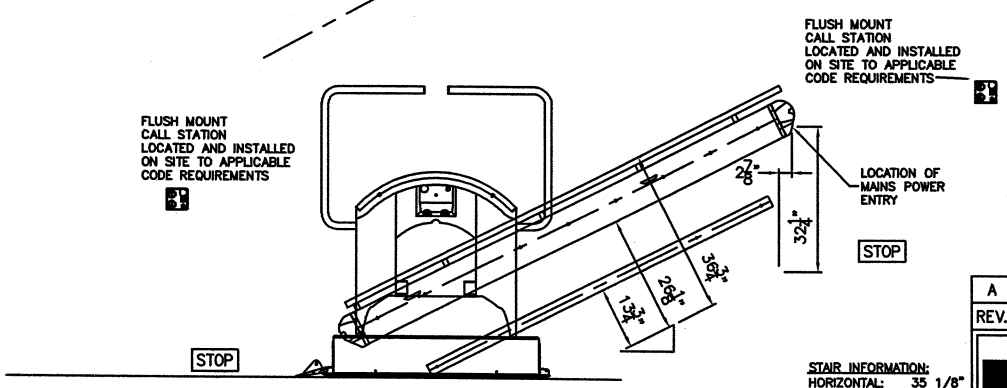

VIEW A

STAIR INFORMATION:

HORIZONTAL:	35 1/8"
VERTICAL:	17 3/4"
SLOPE:	39 1/4"
FIRST RISER:	6 1/4"
UNIT SIDE:	LEFT
# OF RISERS:	4
STAIR ANGLE:	26.8°

A	XPRESS II INCLINED LIFT – DIRECT MOUNT		UNITS: INCHES	7/09	KM	
REV.	SCALE: NTS	TOLERANCES: DIMENSIONAL ANGULAR	PROJECTION:	DATE	DRN.BY	CHK.BY

GARAVENTA LIFT
999 CANDIA RD BLDG 2–1
MANCHESTER, NH 03109
PH: ++1 603–669–6553
FAX: ++1 603–669–0078
http://www.GaraventaUSA.com

SAMPLE DRAWING ONLY
XPRESS II
INCLINED LIFT

GARAVENTA–USA

XPRESS